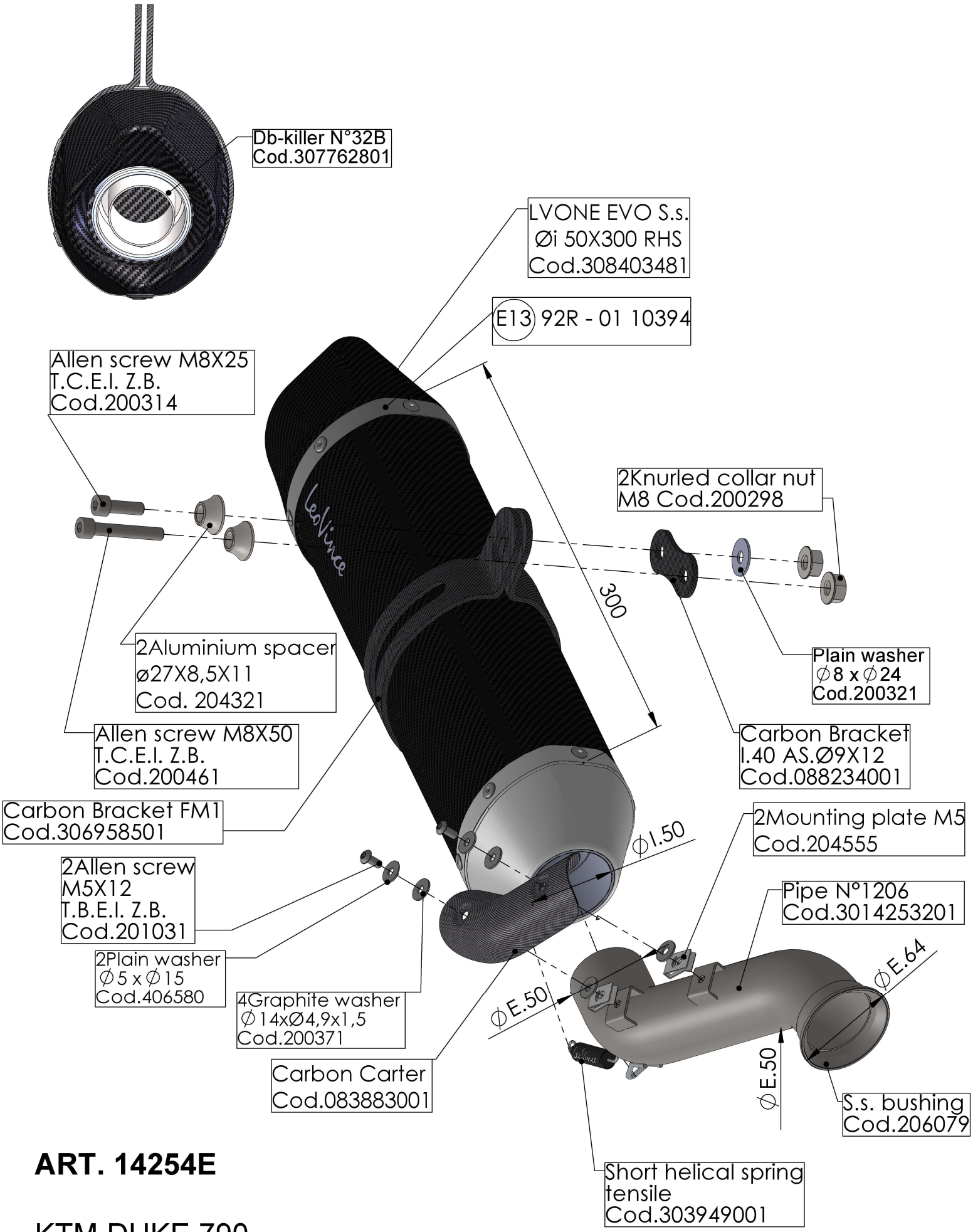

ART. 14254E

KTM DUKE 790

SLIP-ON - LV ONE EVO - CARBON- APPROVED